CSE 3213: Computer Architecture

Md. Momenul Haque

Lecturer, Dept. of CSE, BAUET

Performance Measure

Performance Analysis: Computer performance is the amount of work accomplished by a computer system. The word performance in computer performance means

"How well is the computer doing the work it is supposed to do?"

It basically depends on response time, throughput, and execution time of a computer.

1) **Response Time** is the time from start to completion of a task. This also includes:
   - Operating system overhead.
   - Waiting for I/O and other processes.
   - Accessing disk and memory.
   - Time spent executing on the CPU or execution time.
2) **Throughput** is the total amount of work done in a given time.
3) **CPU execution time** is the total time a CPU spends computing on a given task. It also excludes time for I/O or running other programs.

Measure of a Performance:

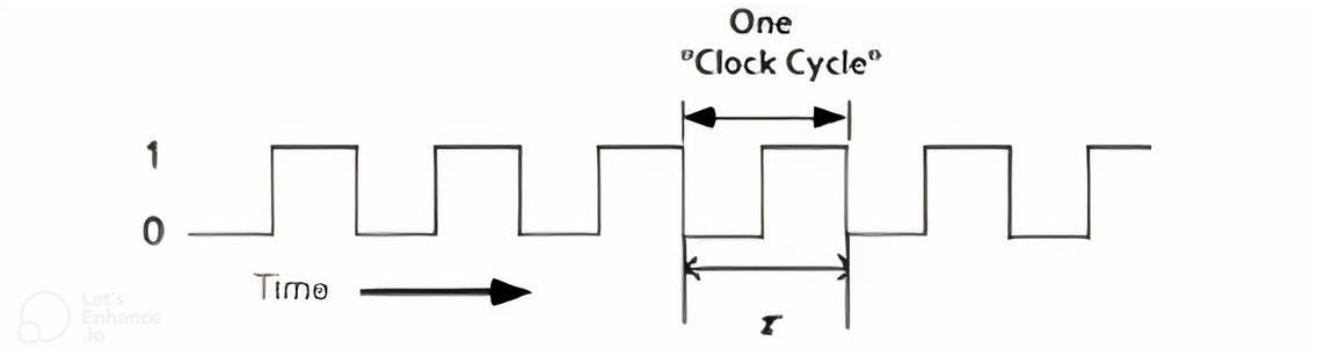

- **CPU Clock:** Computers are constructed in such a way that events in hardware are synchronized using a clock
- **Cycle Time/ Clock time/ clock period (τ):**
  CPU is driven by a clock of constant cycle time τ (in ns)
- **Clock rate/ clock frequency (f):** is defined by the inverse of clock time.

$$Clock\ rate\ f = \frac{1}{\tau} \qquad \text{in Hz (=cycle / second)}$$

$$\text{Also } Clock\ time\ \ \tau = \frac{1}{f}$$

Example 1: Consider CPU_A clock rate 1 GHz and CPU_B clock rate 500 MHz, Now finds out which CPU is faster according to the Clock time.

Solution: $Clock\ rate\ CPU_A\ f = 1\ GHz = \ 10^9 Hz$

$$Clock\ time\ CPU_A\ \ \tau = \frac{1}{f} = \frac{1}{10^9} = 1\ ns$$

$$Clock\ rate\ CPU_B\ f = 500\ MHz = 500 * \ 10^6 Hz$$

$$Clock\ time\ CPU_B\ \ \tau = \frac{1}{f} = \frac{1}{500 * 10^6} = 2\ ns$$

So, CPU_A is faster because it takes less clock time compare to the CPU_B.

- **Instruction count (IC):** Instruction count (IC) is the size of a program, which is the no, of machine instructions to be executed in a program. Sometimes it called instruction path length. A machine instruction is sequence of micro-operations. A micro-operation is an elementary hardware operation that can be carried out in one clock cycle.
- **Cycles per Instructions (CPI):** A single machine instruction may take one or more CPU cycles to complete. Different machine instructions may require different number of clock cycles to execute. Therefore CPI (Cycles per Instructions) becomes an important parameter.

$$CPI = \frac{CPU\ Clock\ cycles\ for\ a\ program}{Instruction\ Count} = \frac{C}{IC}$$

- **Average CPI of a Program:** Average CPI of all instructions executed in the program on a given processor. Different instructions can have different CPIs.
- **Execution Time (CPU Time):** It is the time needed to execute the program. Thus the Execution time/ CPU Time (T in seconds/ program) is given by:

$$T = IC * CPI * \tau$$

The execution of instructions (instruction cycle) requires some steps:

i. Instruction fetch (Memory cycle)
ii. Decode (Processor cycle)
iii. Operand fetch (Memory cycle)
iv. Execution (Processor cycle)
v. Store result (Memory cycle)

Therefore, $CPI = Instruction\ Cysle = processor\ cycles + memory\ cycles$

Usually, memory cycle is k times the processor cycle τ

$$CPI = Instruction\ Cycle = p + m * k$$

Now we can write as,

$$T = IC * (p + m * k) * \tau$$

Where,

IC= Instruction Count

p = number of processor cycles

m = number of memory references

k = ration between memory and processor cycle

τ = processor cycle time

T= CPU Time (Execution Time)

This 5 performance factors (IC, p, m, k, τ) are influences by 4 system attributes:

System Attributes	**IC**	**p**	**m**	**k**	**τ**
Instruction Set Architecture (ISA)	X	X			
Compiler Technology	X	X	X		
CPU implementation and control		X			X
Cache and memory hierarchy				X	X

- **MIPS Rate:** Let C be the total number of clock cycles needed to execute a program. Therefore,

$$CPU\ time\ (T) = Total\ number\ of\ clock\ cycles * clock\ cycles$$

$$T = C * \tau = C/f$$

Furthermore, as we know $CPI = C/IC$

So, $C = CPI * IC$

And $T = CPI * IC * \tau$

Therefore, $$T = \frac{IC * CPI}{f}$$

The processor speed is often measured in terms of MIPS (Millions Instructions per Second). It is simply called MIPS Rate of a given processor.

$$MIPS\ Rate = \frac{IC}{T * 10^6} = \frac{f}{CPI * 10^6} = \frac{f * IC}{C * 10^6}$$

From previous equation we can write,

$$T = \frac{IC}{MIPS * 10^6}$$

- **Throughput (Ws) or Performance:** The number of programs executed per unit time is called system throughput (in programs/ second)

$$Performance\ (Ws) = \frac{1}{Execution\ time\ (T)}$$

$$Performance\ (Ws) = \frac{f}{IC * CPI} = \frac{MIPS * 10^6}{IC}$$

- **Instruction types and CPI:** Consider a program executing on a processor with n types or classes of instructions (like load, store, ALU, branch, etc.)
  We know,

$$CPI = \frac{C}{IC}$$

For CPU design,

$$CPU\ clock\ cycles = CPI * IC = \sum_{i=1}^{n}(CPI_i * IC_i)$$

The overall CPI is given by,

$$Average\ CPI\ \sum_{i=1}^{n}(CPI_i * IC_i) = \frac{\sum_{i=1}^{n}(CPI_i * IC_i)}{IC}$$

Example 2: Our favorite program runs in 10 seconds on computer A, which has a 2 GHz clock. We are trying to help a computer designer build a computer, B, which will run this program in 6 seconds. The designer has determined that a substantial increase in the clock rate is possible, but this increase will affect the rest of the CPU design, causing computer B to require 1.2 times as many clock cycles as computer A for this program. What clock rate should we tell the designer to target?

Solution: Let's first find the number of clock cycles required for the program on A:

$$CPU\ time_A = \frac{CPU\ clock\ cycles_A}{Clock\ rate_A}$$

$$10\ seconds = \frac{CPU\ clock\ cycles_A}{2\ \times\ 10^9 \frac{cycles}{second}}$$

$$CPU\ clcok\ cycles_A = 10\ seconds\ \times\ 2\ \times\ 10^9 \frac{cycles}{second} = 20\ \times\ 10^9 cycles$$

CPU time for B can be found using this equation:

$$CPU\ time_B = \frac{1.2\ \times CPU\ clock\ cycles_A}{Clock\ rate_B}$$

$$6\ seconds = \frac{1.2\ \times 20\ \times\ 10^9 cycles}{Clock\ rate_B}$$

$$Clock\ rate_B = \frac{1.2\ \times 20\ \times\ 10^9 cycles}{6\ seconds} = \frac{0.2\ \times 20\ \times\ 10^9 cycles}{seconds}$$
$$= \frac{4 \times\ 10^9 cycles}{seconds} = 4\ GHz$$

To run the program in 6 seconds, B must have twice the clock rate of A

Example 3: Suppose we have two implementations of the same instruction set architecture. Computer A has a clock cycle time of 250 ps and a CPI of 2.0 for some program, and computer B has a clock cycle time of 500 ps and a CPI of 1.2 for the same program. Which computer is faster for this program and by how much?

Solution: We know that each computer executes the same number of instructions for the program; let's call this number *I*. First, find the number of processor clock cycles for each computer:

We know, $$CPU\ clock\ cycles = CPI * IC$$

$$CPU\ clock\ cycles_A = I * 2.0$$

$$CPU\ clock\ cycles_B = I * 1.2$$

Now we computer the CPU time for each computer:

$$CPU\ time_A = CPU\ clock\ cycles_A * Clock\ cycle\ time_A$$

$$= I * 2.0 * 250\ ps = 500 * I\ ps$$

Likewise, for B:

$$CPU\ time_B = CPU\ clock\ cycles_B * Clock\ cycle\ time_B$$

$$= I * 1.2 * 500\ ps = 600 * I\ ps$$

Clearly, computer A is faster. The amount faster is given by the ratio of the execution times:

$$\frac{CPU\ Performance_A}{CPU\ Performance_B} = \frac{Execution\ time_A}{Execution\ time_B} = \frac{600 * I\ ps}{500 * I\ ps} = 1.2$$

We can conclude that computer A is 1.2 times as fast as computer B for this program.

Example 4: A compiler designer is trying to decide between two code sequences for a particular computer. The hardware designers have supplied the following facts:

	CPI for each instruction class		
	A	B	C
CPI	1	2	3

For a particular high-level language statement, the compiler writer is considering two code sequences that require the following instruction counts:

Code Sequence	Instruction counts for each instruction class		
	A	B	C
1	2	1	2
2	4	1	1

Which code sequence executes the most instructions? Which will be faster? What is the CPI for each sequence?

Solution: Sequence 1 executes 2 + 1 + 2 = 5 instructions. Sequence 2 executes 4 + 1 + 1 = 6 instructions. Therefore, sequence 1 executes fewer instructions.

We can use the equation for CPU clock cycles based on instruction count and CPI to find the total number of clock cycles for each sequence:

$$CPU\ clock\ cycles == \sum_{i=1}^{n}(CPI_i \times IC_i)$$

Now,

$$CPU\ clock\ cycles_1 == (2 \times 1) + (1 \times 2) + (2 \times 3) = 2 + 2 + 6 = 10\ cycles$$

$$CPU\ clock\ cycles_2 == (4 \times 1) + (1 \times 2) + (1 \times 3) = 4 + 2 + 3 = 9\ cycles$$

So code sequence 2 is faster, even though it executes one extra instruction. Since code sequence 2 takes fewer overall clock cycles but has more instructions, it must have a lower CPI. The CPI values can be computed by

We know, $$CPI = \frac{CPU\ clock\ cycles}{Instruction\ count}$$

$$CPI_1 = \frac{CPU\ clock\ cycles_1}{Instruction\ count_1} = \frac{10}{5} = 2.0$$

$$CPI_2 = \frac{CPU\ clock\ cycles_2}{Instruction\ count_2} = \frac{9}{6} = 1.5$$

Example 5: Consider the following performance measurements for a program:

Measurement	Computer A	Computer B
Instruction Count	10 billion	8 billion
Clock rate	4 GHz	4 GHz
CPI	1.0	1.1

a. Which computer has the higher MIPS rating?
b. Which computer is faster?

Solution:

Computer A:

- Instruction Count: 10 billion instructions = 10×10^9 instructions
- Clock Rate: 4 GHz = 4×10^9 cycles/second
- CPI (Cycles Per Instruction): 1.0

Computer B:

- Instruction Count: 8 billion instructions = 8×10^9 instructions
- Clock Rate: 4 GHz = 4×10^9 cycles/second
- CPI (Cycles Per Instruction): 1.1

MIPS (Millions of Instructions per Second) Calculation

We know,

$$MIPS\ Rate = \frac{f\ (Clock\ rate)}{CPI * 10^6}$$

For Computer A:

$$MIPS\ Rate_A = \frac{4 \times 10^9}{1.0 * \ 10^6} = 4000\ MIPS$$

For Computer B:

$$MIPS\ Rate_B = \frac{4 \times 10^9}{1.1 * \ 10^6} = 3636.36\ MIPS$$

Execution Time Calculations:

$$T = \frac{IC * CPI}{f}$$

For Computer A:

$$T_A = \frac{10 \times 10^9 * 1.0}{4 \times 10^9} = 2.5\ seconds$$

For Computer B:

$$T_B = \frac{8 \times 10^9 * 1.1}{4 \times 10^9} = 2.5\ seconds$$

Computer B is faster because it has a shorter execution time.

Home Task:

1. Solve Exercises 1.5 and 1.6 from Reference Book (Page: 55).
2. Self-Study: 1.9 Real Stuff: Benchmarking the Intel Core i7 (Page: 46), 1.10 Fallacies and Pitfalls (Page: 49), 1.11 Concluding Remarks (Page: 52)

Reference Book:

1. Computer Organization and Design - David A Patterson, 5th Edition, ISBN:978-0124077263